Altair Morgan Vanity Collection 534036-WH-AW-NM

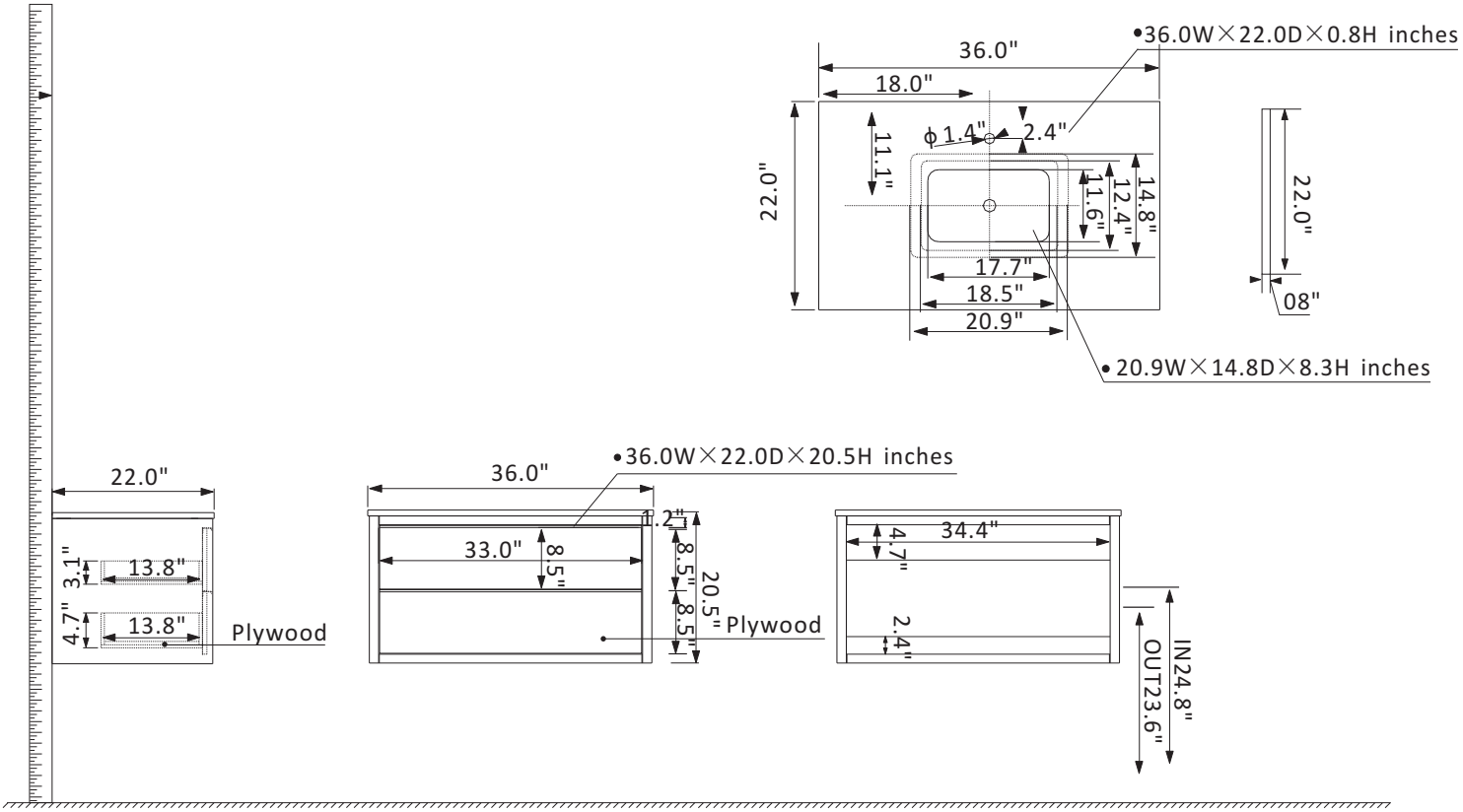

Features

Construction: Solid wood / plywood
Finish: White Finish
Countertop: Composite Carrara White Stone Countertop
Sink: Rectangular, undermount ceramic basin with overflow included
Faucet: Countertop pre-drilled for single faucet hole
Door/Drawer: 1 bridge-shaped drawer and 1 soft-closing drawer
Hardware: Brushed copper finish hardware
Installation: Easy plumbing and faucet installation*

* Does not include faucet, drain assembly, backsplash or P-trap

ALTAIR
FASHION BATHROOM LIFE