UNDERMOUNT PORCELAIN SINK

Installation & Care Instructions

CA425T18-W

CA425T18-B

FOR MODEL NUMBERS

CA425T18-B (Biscuit)
CA425T18-W (White)

BEFORE YOU START

- Cahaba recommends that all undermount porcelain sinks be installed by an experienced, professional installer.
- IMPORTANT: The enclosed cutout template will create a countertop opening with a minimal (1/8" or less) reveal. It is recommended that you discuss this with your installer and agree that this finished appearance is the desired effect. Cahaba is not responsible for improper sink or countertop installations.
- IMPORTANT: The cabinet must be installed, secured, plumb, and level. Failure of this step can lead to product damage.
- Product can break, chip or cause injury if handled carelessly. Handle with care.
- Use the anchors and fasteners provided by the countertop manufacturer and the clamps provided with your sink.
- Cahaba undermount porcelain sinks should only be fastened to a solid surface countertop (i.e. granite, Corian® or Silestone®).
- Cahaba is not responsible for sink or countertop if damaged during installation. Be sure to inspect the sink for damage prior to beginning installation.
- Follow all local plumbing and building codes.

RECOMMENDED TOOLS

- ☐ Tape Measure
- ☐ Safety Glasses
- ☐ Painter's Tape
- ☐ Level
- ☐ Framing Square
- ☐ Pencil (not permanent marker)
- ☐ Shims or Cabinet Fillers
- ☐ Denatured Alcohol
- ☐ Clamps
- ☐ Silicone Sealant
- ☐ Screws (recommended by countertop manufacturer)

FOR WARRANTY ISSUES OR QUESTIONS, CONTACT CAHABA AT (866) 837-2550.

©2018 CAHABA. ALL RIGHTS RESERVED.

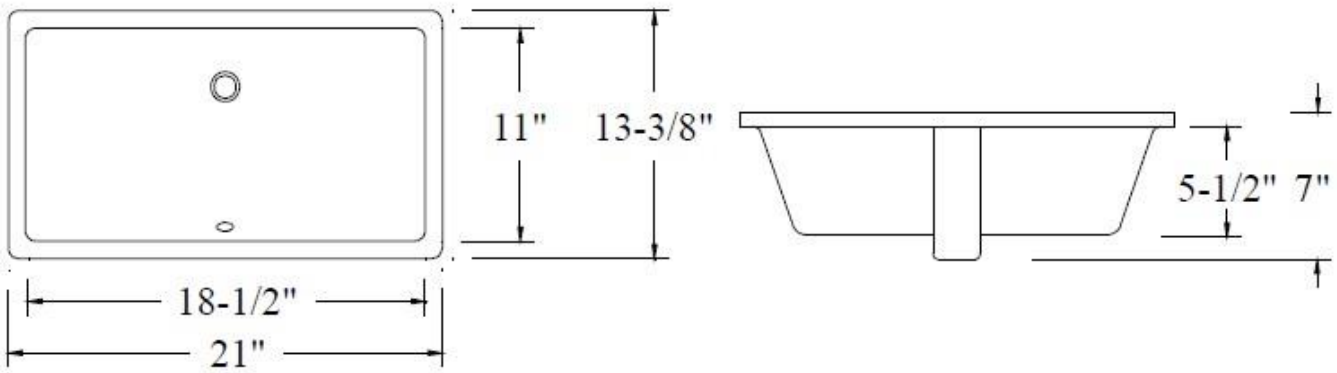

©2018 CAHABA. ALL RIGHTS RESERVED.

PREPARE THE COUNTERTOP

1. Position the template (provided with your sink) front to rear so the sink will not interfere with the cabinet; secure with tape.
2. Trace the template and remove. Dry fit the sink to verify the measurements.
3. Following the countertop manufacturer's instructions, carefully cut the countertop on the inside of the traced line.
4. Locate and drill the mounting holes, following the countertop manufacturer's instructions. Holes should allow even spacing of mounting brackets around the sink.
5. Loosely fasten the mounting brackets to the underside of the cabinet.

▶ ***IMPORTANT: The cabinet must be installed, secured, plumb, and level BEFORE installing the sink.***

▶ ***IMPORTANT: Cahaba undermount sinks should only be fastened to a solid surface countertop (i.e. granite, Corian® or Silestone®).***

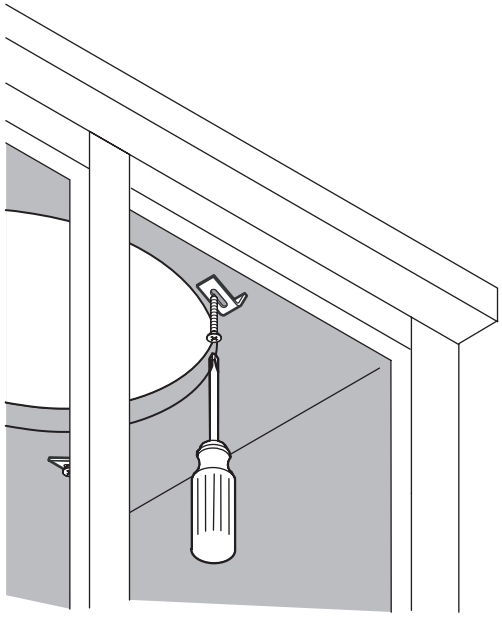

INSTALL THE COUNTERTOP

1. Clean the bottom of the countertop and the top flange (or lip) of the sink with denatured alcohol.
2. Generously apply 100% silicone adhesive sealant evenly all around the top of the sink rim.
3. Position and align the sink under the countertop opening. Tighten fasteners until mounting brackets are snug against sink. Check alignment of sink to the countertop opening.
4. Tighten down fasteners evenly. Be careful not to over-tighten.
5. Immediately remove excess sealant.

▶ ***IMPORTANT: The enclosed cutout template will create a countertop opening with a minimal (1/8" or less) reveal. It is recommended that you discuss this with your installer and agree that this finished appearance is the desired effect. Cahaba is not responsible for improper sink or countertop installations.***

▶ ***IMPORTANT: Cahaba is not responsible for sink or countertop if damaged during installation. Be sure to inspect the sink for damage prior to beginning installation.***

APPLY SILICONE SEALANT AFTER CLEANING THE SINK EDGE AND COUNTERTOP

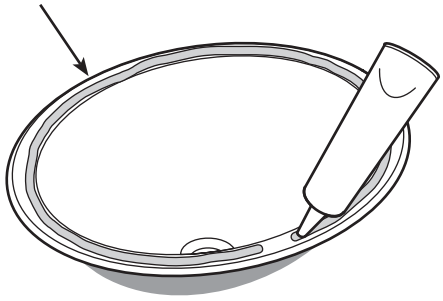

IMMEDIATELY WIPE OFF EXCESS SEALANT

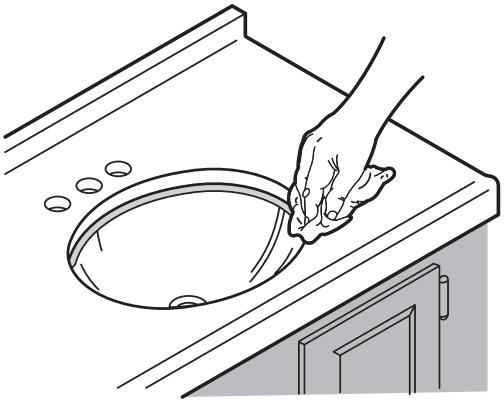

©2018 CAHABA. ALL RIGHTS RESERVED.

RECOMMENDED CLEANERS

- Clean your sink after each use with a soapy sponge, then rinse thoroughly with warm water. You may dry it with a towel or a dry cloth. This will eliminate water spots and streaks, while the sink is in use.
- Abrasive bathroom cleaners will scour and dull the ceramic or porcelain, causing it to lose lustre and shine. Avoid using abrasives.

STAIN REMOVAL

- You may begin to notice stains on your porcelain sink, but don't be alarmed as they are most often caused by minerals within your water supply. These mineral deposits are known for causing stains by settling on the surface of the ceramic.

  Elimination of these stain spots are simple by using a nonabrasive cleaner such as soft-scrub. It's important not to apply force while cleaning your sink, so that you prevent any undo stress on the ceramic which can lead to chipping and cracking in the future. Do not forcefully scrub the stain, as you may scour the ceramic to an irreparable state.
- Sprinkle baking soda on any rust spots or stubborn stains. Rust spots will be most common on the base of the sink near the drain. Use the wet sponge to scrub the rust with the baking soda, creating a paste. Let the paste sit for 10 minutes.

  Rinse the sink with white vinegar. The vinegar will foam when it touches the baking soda. This is normal and will help remove any residual staining. Rinse the sink and dry with a soft cloth.

CAUTION

- Avoid contact of your sink with products that are high in acidity. Do not use any dishwashing detergents or bleaches containing chlorine. Any of these types of cleaners and chemicals can stain and weaken the surface of your sink. If these products do come in contact with your sink, rinse the sink thoroughly immediately and dry with a towel or soft cloth.

©2018 CAHABA. ALL RIGHTS RESERVED.

LIMITED LIFETIME WARRANTY

This product has been manufactured and tested to the highest quality standards by Cahaba. We offer our customers thoughtfully crafted fixtures & accessories, engineered for enduring performance over years of use.

WHO IS COVERED BY THE WARRANTY

This warranty extends to the original purchaser only. This warranty is not transferable, between homes or owners and is only applicable to residential use.

WHAT IS COVERED BY THE WARRANTY

Cahaba warranties this product against defects due to material or craftsmanship error during the warranty period: Cahaba will provide replacement parts at no charge, or at its option, replace any product or part of the product that is deemed defective, under normal installation, use, service and maintenance. If Cahaba is unable to provide a replacement and repair is not practical or cannot be made in timely fashion, Cahaba may elect to refund the purchase price in exchange for the return of the product.

CONDITIONS AND EXCLUSIONS

Like other home fixtures, Cahaba products will require light maintenance to ensure proper function. We provide you with complete knowledge to perform this maintenance and can also recommend resources if you are unable to fulfill this service.

A. Cahaba will not be responsible for product failures due to lack of maintenance or proper use. Please read your care and maintenance documentation to determine the limits of proper use.

B. The original sales receipt, order number, and/or proof of purchase must be presented at the time of the warranty claim, without exception, for this warranty to be applied to all Cahaba products.

C. Cahaba recommends installing all Cahaba products with a licensed, professional plumber. Cahaba will not be held responsible for any damage or product failure due to improper installation, misuse, or failure to use a licensed professional. Please read your care and maintenance documentation to determine the limits of proper use.

D. Commercial use will automatically void this warranty.

NON-APPLICABILITY OF THIS WARRANTY

By the purchase and use of our products, you agree that Cahaba is not liable for incidental, consequential or special damages associated with the return, replacement, installation or use of your product. This includes freight costs, cartridge replacement, labor, travel time, lost profit, home damages and other contingent liabilities and costs (including, without limitation, costs associated with experts, investigations, analyses, attorneys and other professionals and services).

The Cahaba warranty is a comprehensive and explicit limit of liability and all items outside of it are not addressable by or the responsibility of Cahaba. Certain states have variances regarding implied warranties and in those situations we remain fully compliant. Cahaba makes no implication that products comply with any or all local building or plumbing codes. It is the consumer's responsibility to determine local code compliance. This warranty extends to the original purchaser and first consumer.

FOR WARRANTY ISSUES OR QUESTIONS, CONTACT CAHABA AT (866) 837-2550.

©2018 CAHABA. ALL RIGHTS RESERVED.