Pre-Installation Considerations
Topmount EZ Torque Fasteners

1. Our patented EZ Torque fasteners are designed to save time and reduce installation effort, making them one of the fastest and easiest ways to install a drop-in sink. They are specifically intended for use with laminate countertops.

For installations in solid surface or stainless steel countertops, wood backing must be added at each point where the EZ Torque claw contacts the underside of the surface. This backing provides the necessary support to prevent the claw from rotating or slipping during tightening, ensuring a secure installation.

2 The EZ Torque fastener can be installed using a hand drill or screw drivers. If using a drill, set the drill to a medium torque setting and tighten until the ledge just makes contact with the countertop. Avoid over-tightening, as excessive torque may damage the fastener or surrounding material.

3. When cutting the countertop, ensure there is clear space in the cabinet below for the fastener to make un-obstructed contact with the underside of the countertop. Generally speaking, ensure there is clearance of at least the outside perimeter of the sink plus ½" (13mm).

Franke Kindred Canada Limited
1000 Franke Kindred Road | Midland, ON | L4R 4K9
www.franke.com
Canada: 1-855-446-5663, email: commercial-info.ca@franke.com
USA: 1-855-526-0503, email: commercial-info.us@franke.com

31413 - 0626

Faucet installed through countertop
Anti-vandal installation

FRANKE

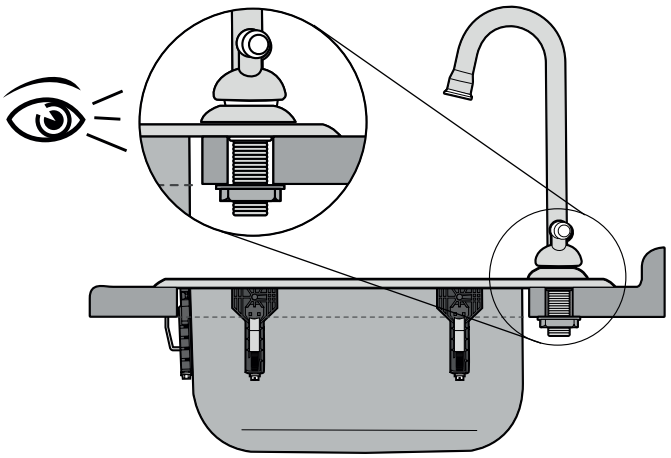

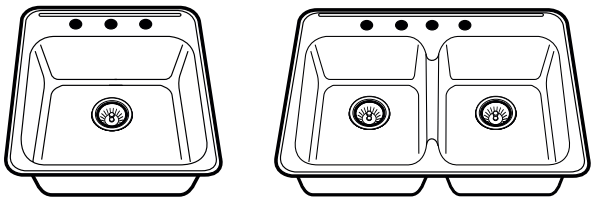

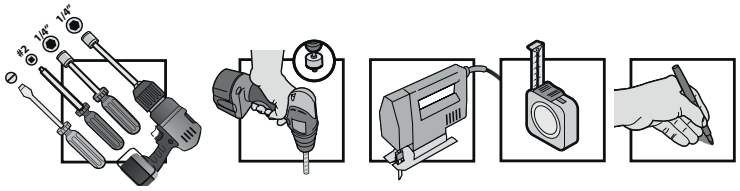

1

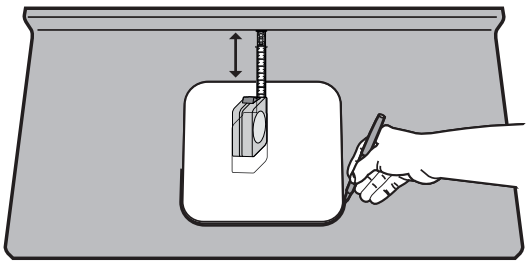

2

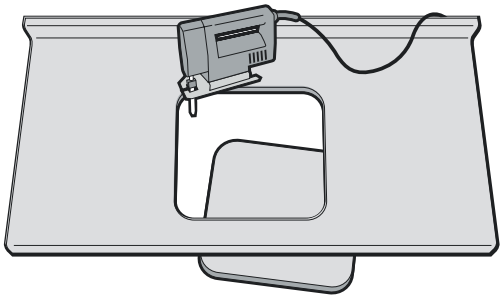

3

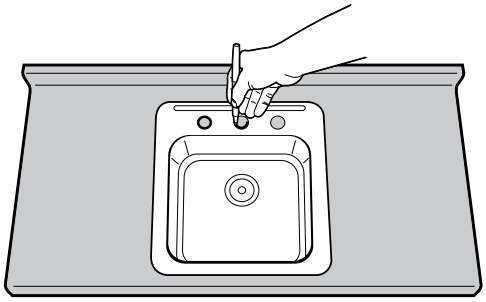

4

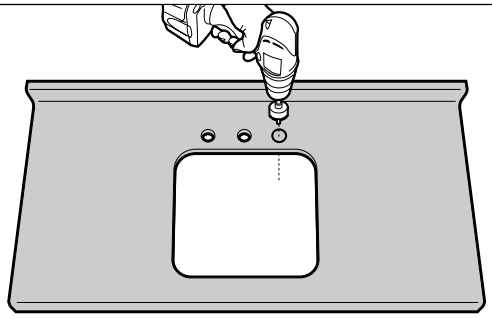

5

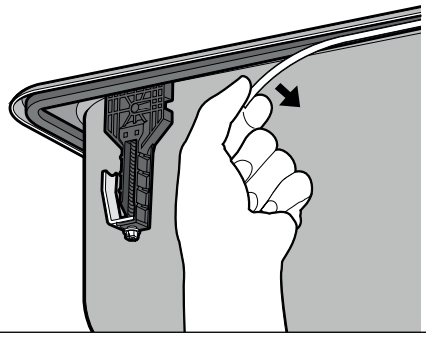

6

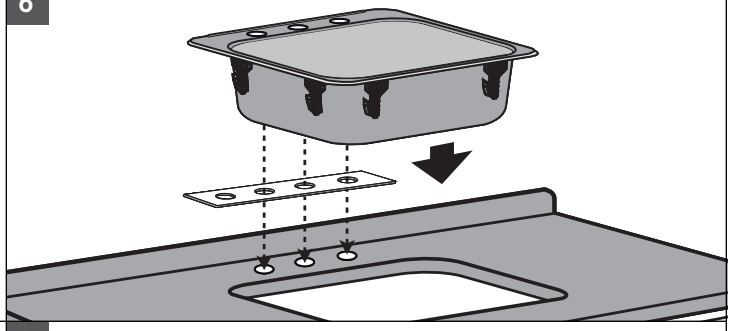

7

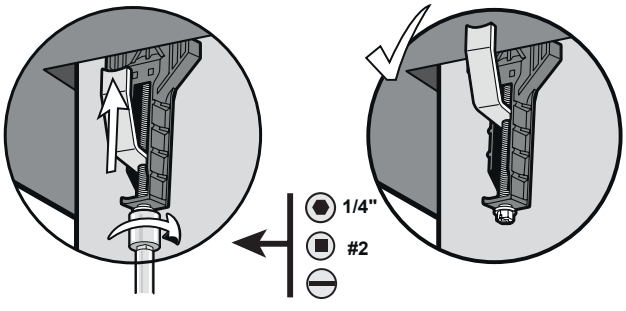

8

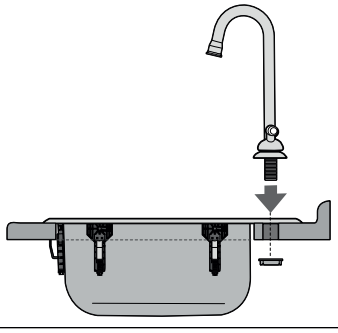

Franke
www.franke.com

1000 Franke Kindred Road

commercial-info.ca@franke.com | ☎ 1-855-446-5663 | 1-866-227-3050
commercial-info.us@franke.com | ☎ 1-855-526-0503 | 1-866-440-2250

Faucet pre-installed on sink

FRANKE

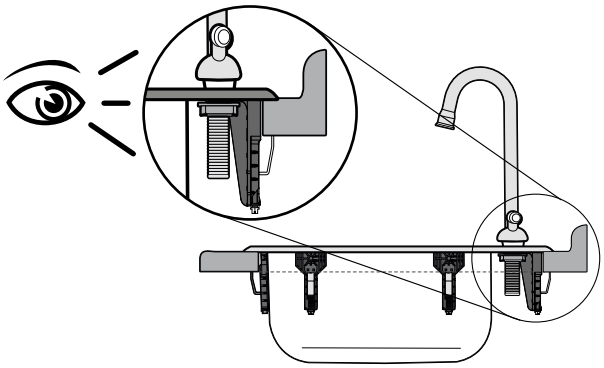

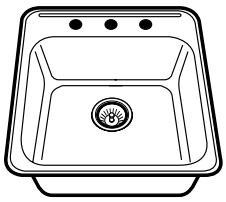

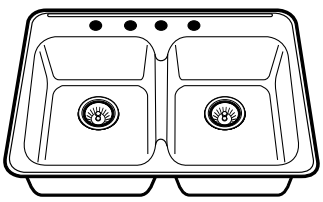

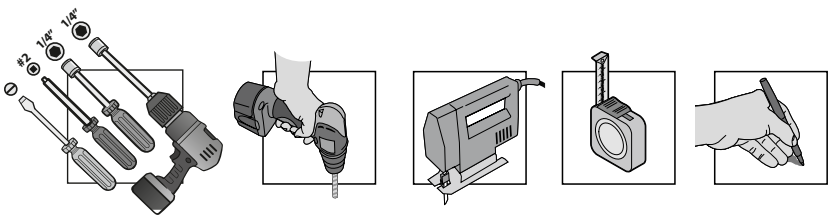

1

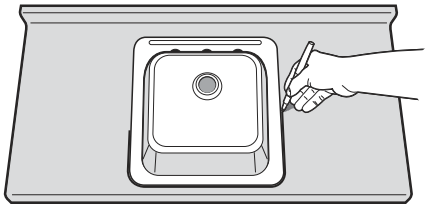

2

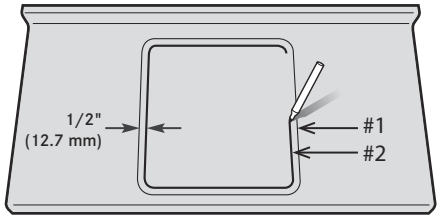

3

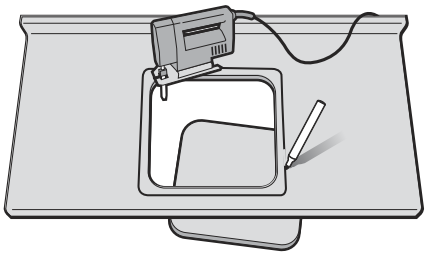

4

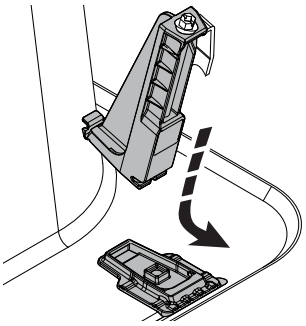

5

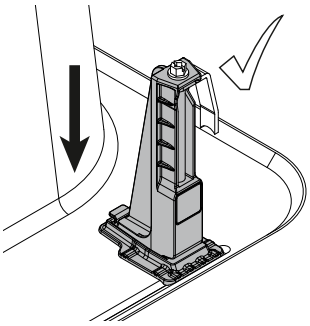

6

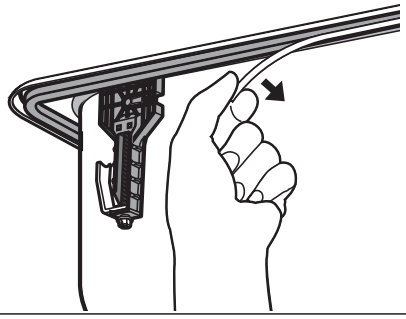

7



8

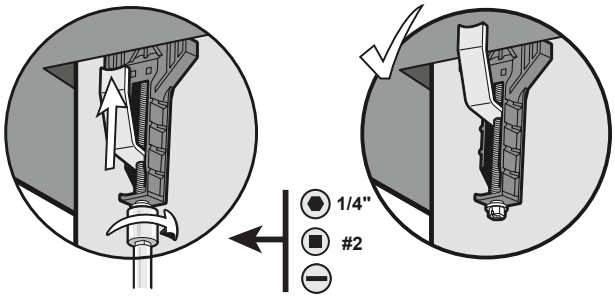

9

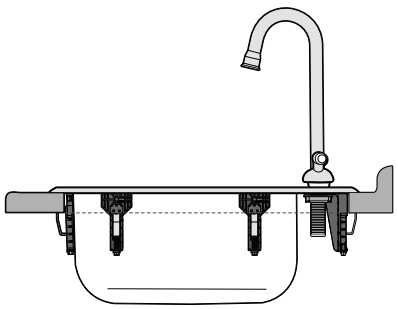

Franke
www.franke.com

1000 Franke Kindred Road| Midland | ON L4R 4K9 | Canada

commercial-info.ca@franke.com | ☎ 1-855-446-5663 | 1-866-227-3050
commercial-info.us@franke.com | ☎ 1-855-526-0503 | 1-866-440-2250