ALBS2706P-1 ADA Single topmount, 18 ga | 207.0682.632



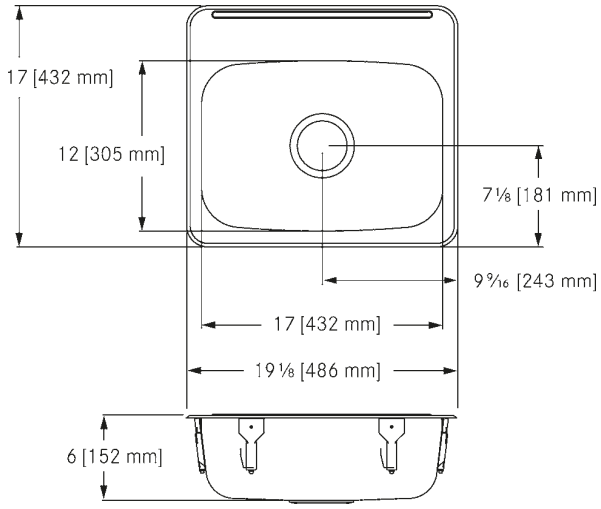

Wheelchair accessible, single compartment, self rimming topmount sink with faucet ledge. 18 gauge (1.2 mm), type 304 (CNS 18/10) stainless steel. Exposed surfaces are #4 satin finished. Undercoated to reduce condensation and resonance. Includes waste fitting, factory applied rim seal, cutout template, and factory installed EZ TORQUE™ fasteners. Certified to ASME A112.19.3-2008 / CSA B45.4- 08. Meets ADA (Americans with disabilities act guidelines) and ANSI A117.1 (Accessible and usable buildings and facilities). Check local codes to ensure compliance. Centre waste location. Includes 3 1/2" (89 mm) crumb cup strainer with 1 1/2" (DN38) brass tailpiece. Model Options, specify when ordering: ALBS2706P-1-1, 1 faucet hole, 1 1/2" diameter. ALBS2706P-1-3, 3 faucet holes, 1 1/2" diameter, 4" centres, 8" centreset. ALBS2706P-1, Custom (non-returnable). 17 x 19 1/8" Overall. 12 x 17 x 6" Bowl. (FB x LR x D). 432 x 486 mm Overall. 305 x 432 x 152 mm Bowl. (FB x LR x D).

Product Dimensions	
Overall front to back	17.008
Overall left to right	19.134
Bowl dimension front to back	12.008
Bowl dimension left to right	17.008
Bowl depth	5.984
Installation	
Installation type	Topmount
Installation system	EZ Torque
Product specifications	
Gauge	18
Wheelchair accessibility	Yes
Certification	cUPC
Type of material	Type 304
Material code	CNS 18/10
Surface finish	#4 Satin
Number of bowls	1
Faucet ledge position	Yes
Number of faucet holes	Specify when ordering
Waste location	Center
Waste size	3 1/2" (89mm)
Tailpiece diameter (in)	1 1/2" (38mm)
Product identification	
Model	ALBS2706P-1

Brand	FRANKE
Product category	Stainless steel sinks
Features	
Waste assembly	Included
Waste fitting	Crumb cup waste assembly