LBS6807-2 Single bowl topmount, 20 ga | 207.0682.966



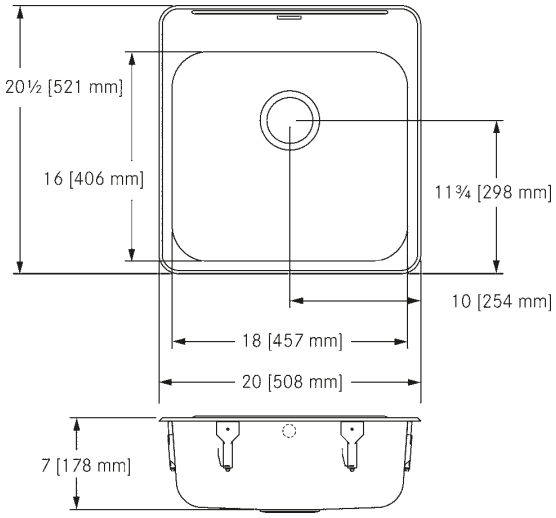

Single compartment self rimming topmount sink with faucet ledge. 20 gauge (0.9 mm), type 301 (CNS 18/8) stainless steel. Exposed surfaces are #4 satin finished. Undercoated to reduce condensation and resonance. Includes waste fitting, factory applied rim seal, cutout template, and factory installed EZ TORQUE™ fasteners. Certified to ASME A112.19.3-2008 / CSA B45.4-08. Centre back waste location. Includes 3 1/2" (89 mm) crumb cup strainer with 1 1/2" (DN38) stainless steel tailpiece, with overflow. Model Options: LBS6807-2-1, 1 faucet hole, 1 1/2" diameter. LBS6807-2-3, 3 faucet holes, 1 1/2" diameter, 4" centres, 8" centreset. LBS6807-2, Custom (non-returnable). 20 1/2 x 20" Overall. 16 x 18 x 7" Bowl. (FB x LR x D). 521 x 508 mm Overall. 406 x 457 x 178 mm Bowl. (FB x LR x D).

Product Dimensions	
Overall front to back	20.512
Overall left to right	20
Bowl dimension front to back	15.984
Bowl dimension left to right	17.992
Bowl depth	7.008
Installation	
Installation type	Topmount
Installation system	EZ Torque
Product specifications	
Gauge	20
Certification	cUPC
Type of material	Type 301
Material code	CNS 18/8
Surface finish	#4 Satin
Number of bowls	1
Faucet ledge position	Yes
Number of faucet holes	Specify when ordering
Waste location	Center back
Waste size	3 1/2" (89mm)
Tailpiece diameter (in)	1 1/2" (38mm)
Product identification	
Model	LBS6807-2
Brand	FRANKE
Product category	Stainless steel sinks

Features

Waste assembly	Included
Waste fitting	Crumb cup assembly & overflow
Overflow location	Yes