MOEN

Buy it for looks. Buy it for life.®

Specifications

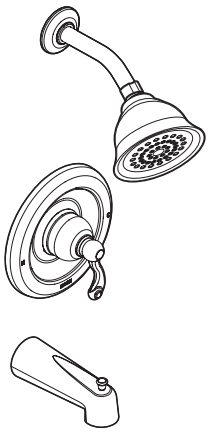

Traditional® POSI-TEMP®
Single-Handle Tub/Shower Trim

Models: T2121 series - valve trim only
T2122 series - shower trim only
T2123 series - tub/shower trim

Valves: 62300 series
2500 series

WaterSense Meets EPA Criteria
Certified by IAPMO R&T
EP Suffix Models Only

DESCRIPTION
- Metal construction with various finishes identified by suffix
- Includes showerhead, arm, flange and tub spout

OPERATION
- Lever style handle
- Handle operates counterclockwise through a 270˚arc with off at 6 o'clock and maximum hot at the 9 o'clock position. Shut off in clockwise direction
- Adjustable temperature limit stop to control maximum hot water temperature
- Pressure balancing mechanism maintains selected discharge temperature to ± 2°

FLOW
- Showerhead is limited to 2.5 gpm (9.5 L/min) at 80 psi
- EP suffix models are limited to 2.0 gpm (7.6 L/min) max for products manufactured prior to June 30, 2018. EP suffix models manufactured after June 30, 2018 are limited to 1.75 gpm (6.7 L/min) max.
- NH suffix models contain no showerhead

CARTRIDGE
- 1222 cartridge design
- Nonmetallic/nonferrous and stainless steel materials
- Accommodates back to back installations

STANDARDS
- Third party certified to meet ASME A112.18.1/CSA B-125.1 and all applicable requirements referenced therein
- EP suffix models are third party certified to Watersense®
- **ADA** for lever handles

WARRANTY
- Lifetime limited warranty against leaks, drips and finish defects to the original homeowner
- 10 year limited warranty when used in a multifamily installation
- 5 year limited warranty when used in a commercial installation

Visit www.moen.com/support for complete details and limitations

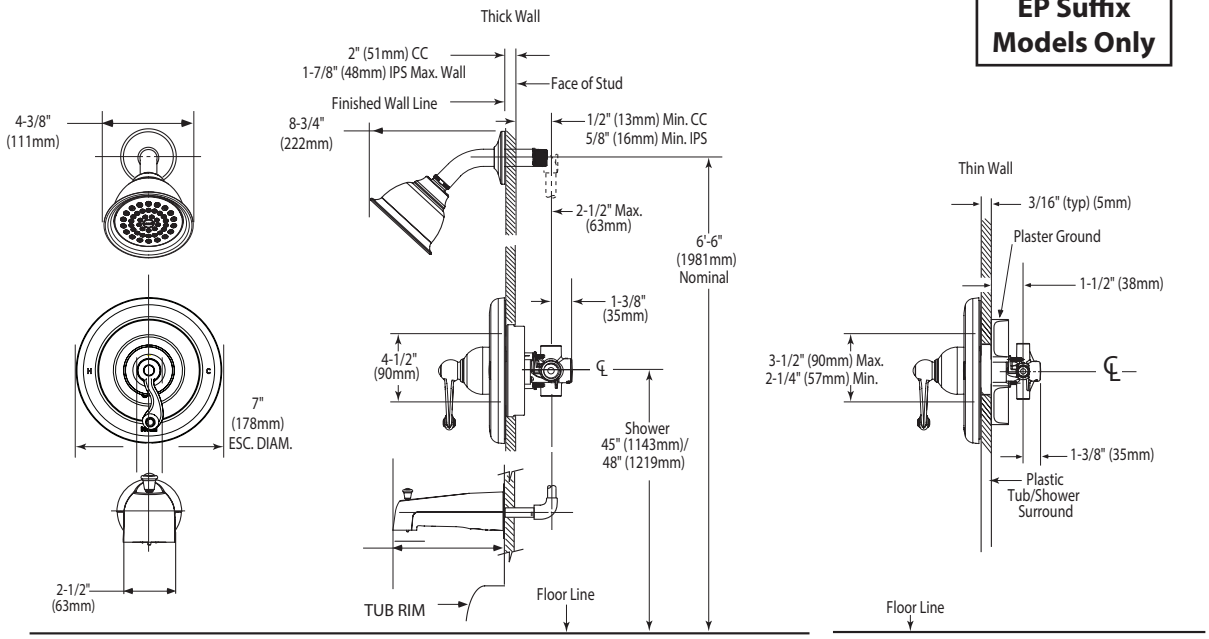

M•pact System

CRITICAL DIMENSIONS

(DO NOT SCALE)

Rev. 12/17

FOR MORE INFORMATION CALL: 1-800-BUY-MOEN
www.moen.com

07/12/2018 SPC1-993 S000023544
Released 01