MOEN®

Specifications

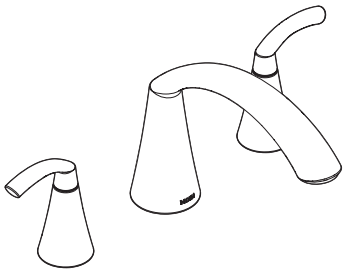

GLYDE™
Two-Handle Roman Tub Faucet Trim

Models: T373 series

Valves: 4792, 4793, 4794, 4796, 4797, 4798

DESCRIPTION
- Metal construction with various finishes identified by suffix
- Hot and cold temperature indicators available

OPERATION
- Lever style handles with optional hot and cold indicators available
- Rotate hot side handle counterclockwise to open (clockwise to close) and the cold side handle clockwise to open and (counterclockwise to close)

STANDARDS
- Third party certified to meet ASME A112.18.1/CSA B125.1 and all applicable requirements referenced therein
- ADA for lever handles

WARRANTY
- Lifetime limited warranty against leaks, drips and finish defects to the original homeowner
- 10 year limited warranty when used in a multifamily installation
- 5 year limited warranty when used in a commercial installation

Visit www.moen.com/support for complete details and limitations

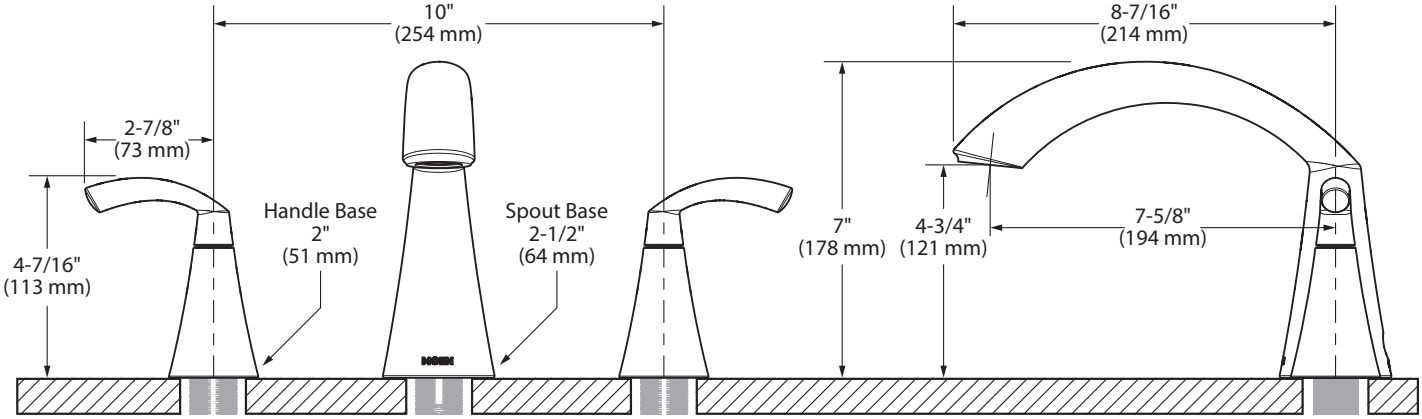

M•pact™ System

CRITICAL DIMENSIONS

(DO NOT SCALE)

FOR MORE INFORMATION CALL: 1-800-BUY-MOEN
www.moen.com