RVB0312
BATHROOM VESSEL SINK

RUVATI®
SPECIFICATION SHEET

MATERIAL

- PORCELAIN CERAMIC:
  Thick solid construction for extreme durability.



FEATURES

- SMOOTH, GLAZED SURFACE:
  Non-porous and resistant to scratching, chipping, or crazing.
- CURVED BOWL SHAPE:
  Ensures perfect water drainage and makes it easy to clean.

IN THE BOX



Installation Guide

NOMINAL DIMENSIONS

Exterior: 12" (wide) x 12" (front-to-back)
Interior Bowl: 11" (wide) x 11" (front-to-back)
Bowl Depth: 5"
Minimum Cabinet Size: N/A
Drain Hole Size: 1¾"

Installation Type:
Vessel
Drain Location:
Center

RUVATI USA
www.ruvati.com

Phone: 1.855.478.8284
Email: support@ruvati.com

SOLD SEPARATELY



Popup Drain
[RVA5102WH]

DIMENSIONS

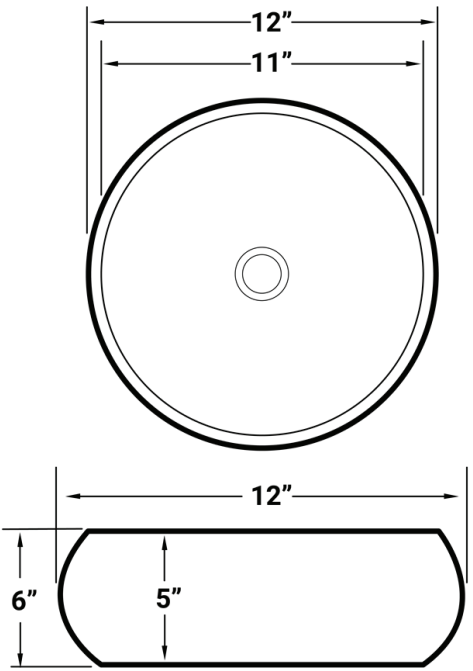

SCAN TO REGISTER YOUR WARRANTY

or visit
www.ruvati.com/register

RUVATI USA
www.ruvati.com

Phone: 1.855.478.8284
Email: support@ruvati.com