Streamline

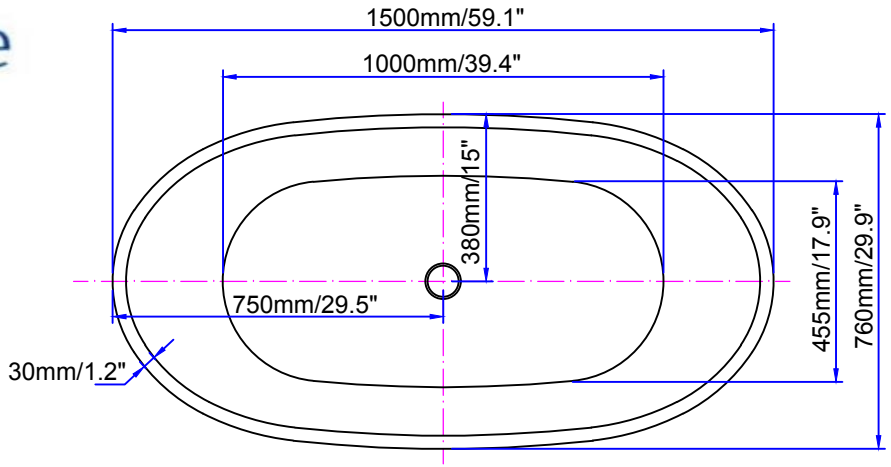
1500mm/59.1"
1000mm/39.4"
380mm/15"
455mm/17.9"
760mm/29.9"
750mm/29.5"
30mm/1.2"

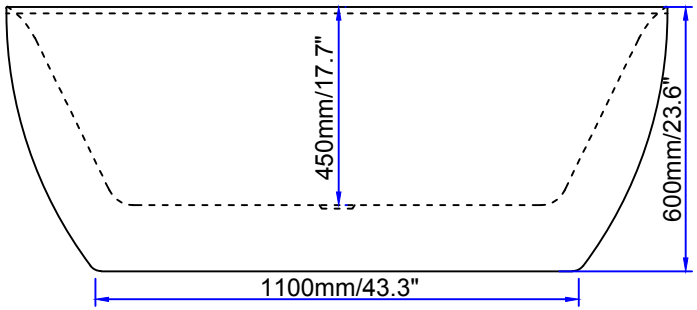
450mm/17.7"
600mm/23.6"
1100mm/43.3"

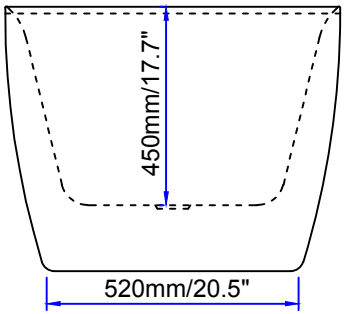
450mm/17.7"
520mm/20.5"

Streamline

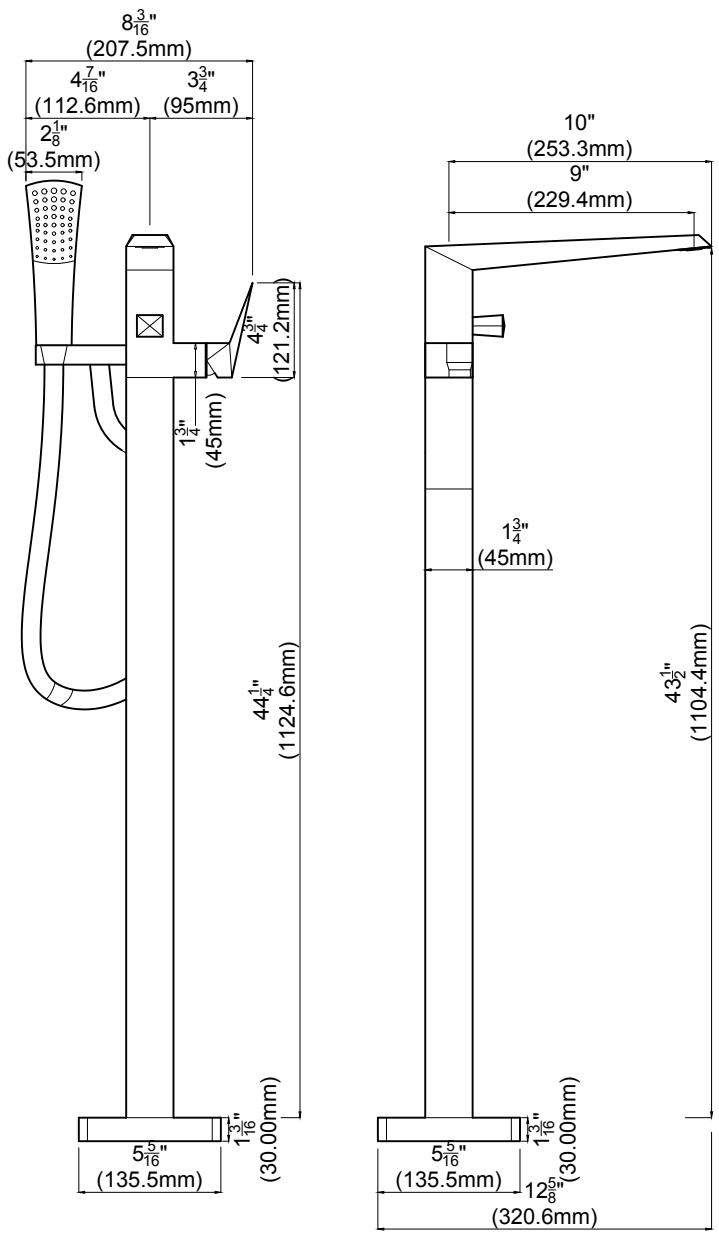
8 3/16"
(207.5mm)
4 7/16"
(112.6mm)
3 3/4"
(95mm)
2 1/8"
(53.5mm)
4 3/4"
(121.2mm)
1 3/4"
(45mm)
44 1/4"
(1124.6mm)
1 3/16"
(30.00mm)
5 5/16"
(135.5mm)
10"
(253.3mm)
9"
(229.4mm)
1 3/4"
(45mm)
43 1/2"
(1104.4mm)
1 3/16"
(30.00mm)
5 5/16"
(135.5mm)
12 5/8"
(320.6mm)