Streamline

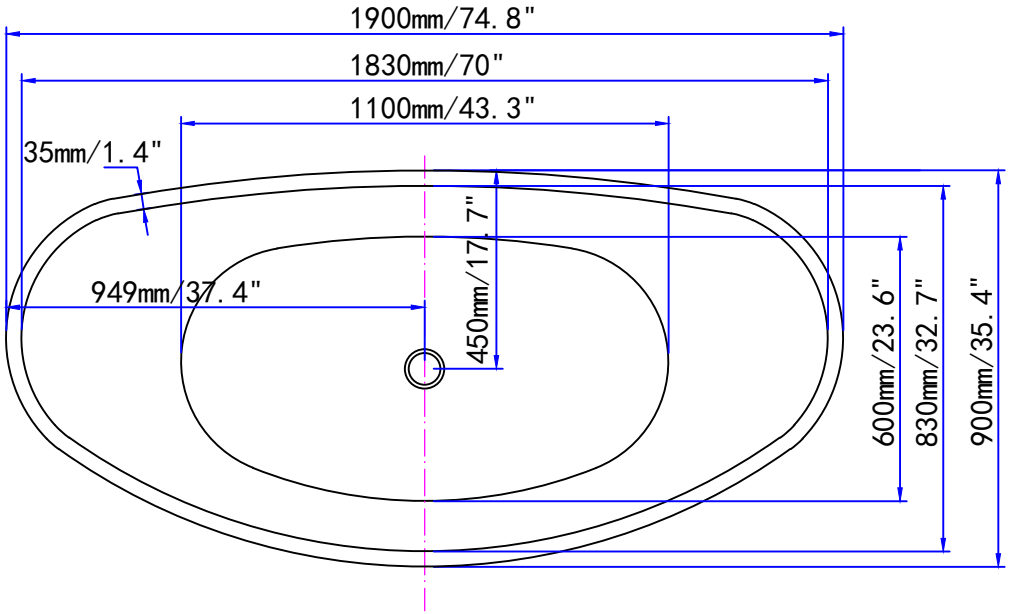

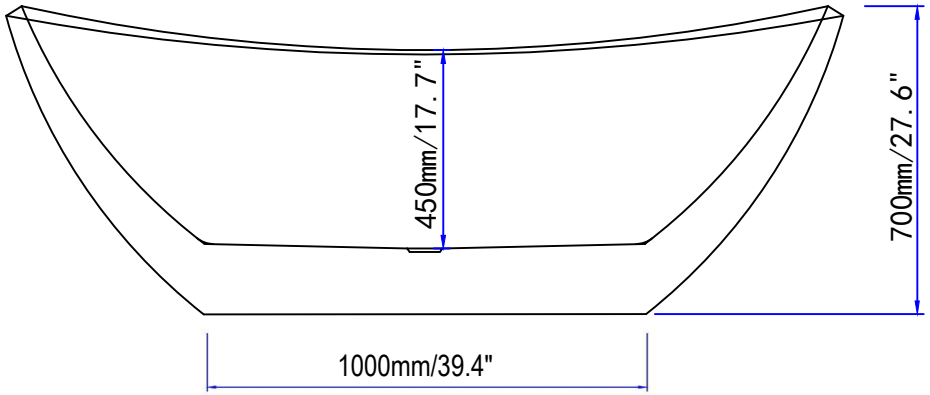

N-940-75FSWH-FM

Streamline

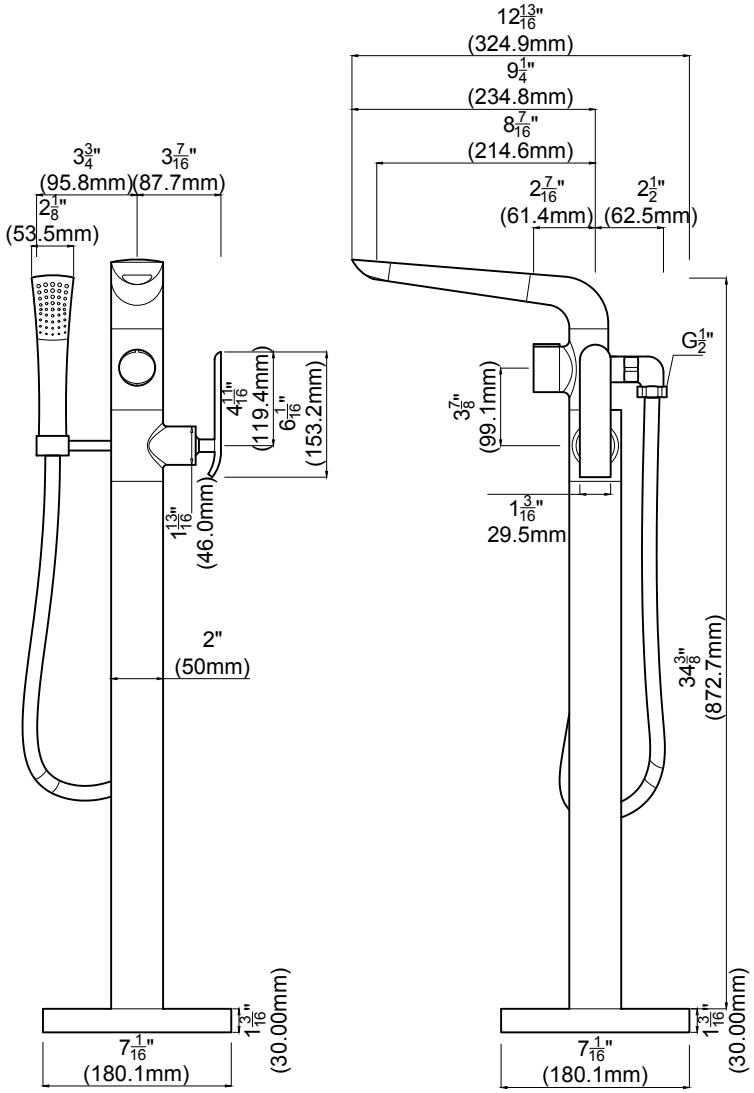
3 3/4"
(95.8mm)
3 7/16"
(87.7mm)
2 1/8"
(53.5mm)
4 1/16"
(119.4mm)
6 1/16"
(153.2mm)
1 13/16"
(46.0mm)
2"
(50mm)
1 3/16"
(30.00mm)
7 1/16"
(180.1mm)
12 13/16"
(324.9mm)
9 1/4"
(234.8mm)
8 7/16"
(214.6mm)
2 7/16"
(61.4mm)
2 1/2"
(62.5mm)
G 1/2"
3 7/8"
(99.1mm)
1 3/16"
29.5mm
34 3/8"
(872.7mm)
1 3/16"
(30.00mm)
7 1/16"
(180.1mm)